Amateur TV Receiver By Ian F Bennett G6TVJ

Here is a design for an ATV receiver which makes use of a Sharp Satellite tuner module. The module was bought from "Satellite Surplus" at a rally a year or so ago. The tuner module is basically all the hard work already done, so all that is needed is some video circuitry and a power supply. I built the receiver primarily for use with "Unknown" signals on l3cm, so I did not include any sound circuitry, but a sound demodulator can easily be added if desired. There are one or two types of tuner module floating around, my design should also work with other modules either bought surplus or robbed from old satellite receivers.

Circuit

Fig l shows the circuit diagram for the receiver, a base band signal first emerges from the tuner module and is amplified by an EL2O2U video op-amp. The base band signal is basically the raw demodulated received signal and so is quite wide band, pre-emphasised (Boosted HF) and may contain one or more sound subcarriers. The op-amp brings the level up by about 14 dB, the output from the sharp module is quite low, other modules may provide a higher level and so the gain of this op-amp stage can be reduced. The B.B. output of the sharp module appears to be DC coupled and at a potential above ground, the B.B. signal is DC coupled into the op-amp stage at this potential so the inverting feedback resistor is referenced to +5V which helps to cancel this DC potential at the op-amp output. A big fat juicy electrolytic feeds the next stage to AC couple the video and prevent any unwanted DC from "Smoking" the attenuator.

Next up, a variable attenuator, this sets the video level through out receiver, this is a constant impedance device which is preferred for video as like RF, video is a "matched" signal. I did publish a design for a constant impedance attenuator in P5 a couple of years ago, failing this the attenuator can be omitted and the gain varied at the previous stage by putting a potentiometer in the op-amp feedback loop.

The attenuated signal passes into a standard CCIR video de-emphasis network, this takes out some of the HF and helps to improve the

apparent group delay performance, contrary to popular belief the noise performance is only improved by a couple of dB’s. The CCIR network is a constant impedance network so hence the reason, for using a constant impedance attenuator to drive it.

The de-emph network feeds a second op-amp which amplifies the video and compensates for the insertion loss of the de-emph network. This op-amp is fed via a switch to allow swapping between positive and negative video modulation, a useful feature when operating on l3ems. Unfortunately in inverting mode the op-amp gain changes so a second switched resistor is used in the feed back loop so that the over all amplitude remains virtually constant when changing polarity. A relay is used to switch the signal, this allows the relay to be placed adjacent to the circuitry and hence keep all lead lengths short. The relay is simply remotely switched from the receiver front panel.

Next item a video low pass filter, this removes any sound subcarriers, the one used is available from Cirkit. The filter rolls off at about 4.5 MHz so does knock down the chroma a little, but without it the video as viewed on a scope will look noisier than it really is, an unfiltered signal will contain out of band noise up to about 8MHz. The filter is not essential it may make little difference on a picture monitor so it can be left out.

The filter chosen is cheap but not phase equalised so if you're into video test waveforms you will be disappointed with the filtered output, its a bit ringy and significant chroma-lum delay is present.

The filtered video is buffered and amplified by yet another EL2020 op-amp and is ready for viewing on a telly. The receiver output can he taken from this point or an additional circuit can be used.

The receiver output can be passed through a DC restored amplifier. An EL4089 amplifier contains a clamp circuit which maintains the sync bottoms at approximately earth potential. This circuit can help remove any low frequency distortion present on the incoming signal. If rolling or tearing pictures are present, and the effects appear to be picture content sensitive then the clamp can be switched in which should help steady things up.

The clamp circuit within the EL4089 amplifier requires sync pulses to operate the clamp action, these pulse5 are provided by an EL4581 sync separator I.C. The sync separator provides mixed syncs derived from the incoming video, unfortunately the circuit does require good syncs to function properly. Noise or severe distortion on the incoming signal can cause miss clamping to take place so the circuit will fall over. The circuit will work best when a strong but distorted signal is detected, if the syncs are crushed or the distortion is very bad, the sync separator will be unable to find the proper syncs so miss-clamping will occur. Poor video clamping can cause lines or low frequency noise to appear on the picture, it can sometimes bugger up the picture completely. A relay can be used to select the clamped video output, so that it can be switched in and out of circuit as required.

Tuning

The only other thing which needs to be added to a tuner module is a tuning voltage. A pin on the module is taken to the wiper of a potentiometer, this varies the voltage and hence tunes the receiver. Care is needed to ensure the supply remains stable and that there is no hum present on the signal otherwise the receiver could drift and hum bars will appear on the picture.

Synthesiser

Most satellite tuner modules are designed to operate with a synthesiser, originally this would have been quite a complicated affair using a microprocessor. The microprocessor would have the tuning, memory and remote control functions all integrated on one or two chips. For amateur applications a simpler synthesiser could be added to the receiver.

Many tuner modules have a "Pre-scaled" local oscillator output, usually the L.O. divided by 128 or 256. This low frequency (A few MHz) can be fed directly into a parallel synthesiser like the Motorola MC 145151 and a simple loop filter added. The loop filter connects to the tuning voltage and bingo one very stable ATV receiver! The frequency switching could be done on "Dip" switches or you could program an EPROM, all good old simple parallel logic not a PIC insight anywhere!

Results

The results I obtained from this receiver weren't bad, the video circuitry comes out best of course. When using a weak signal from my l3cm MKII transmitter the received picture remained locked and in colour right down to Pl. Sync pulses do not really contain much information they only have to tell the telly where the starts of lines and fields are. Even if very noisy, so long as the video signal is not distorted and contains the correct amount of chroma you should get a locked, colour picture on most tellies. Most colour killer circuits in TVs will hang on to the chroma if it is there right down to P1/2. Try an experiment, pull out the aerial down lead from your normal TV and bring it back close to the socket until a picture starts to appear, note at what point the picture locks up and becomes colour, you might be surprised. don't try this if you have a Digital TV, you will be interrupting a Coded Orthogonal Frequency Division Multiplex 24 MB/S Transport Bit Stream Containing an MPEG2 Coded Program Multiplex- and who knows what will happen!

The RF performance of the Sharp Module can be a bit mixed, I found it Ok in the shack but on the road it was susceptible to other nearby strong signals and could get wiped out easily. A filter at the RF input could improve matters, the RX was OK on 3cm and produces an excellent picture from GB3XG. Other tuner modules may give better results in terms of RF.

Using other Tuners

The circuit should work with other tuner modules, the first op-amp stage may need AC coupling from the tuner output and the gain at this point should be checked. I have found some tuner modules to perform poorly at low video frequencies, so the results of the excellent video circuitry may be compromised by the tuner. The only way to test the tuner is to feed it with a known good signal modulated with a square wave and look for ramping effects on the base band signal.

Sound Circuit

There is no sound demodulator in this circuit but one could bc easily added. The base band signal from the first op-amp stage can be used to feed a demodulator. I have used a TBAl2O discriminator type demodulator and an XR215 PLL demodulator in the past, both give

good results. If only amateur signals are to be received with a 6 MHz subcarrier, it should be possible to place a 6 MHz ceramic filter at the input to the sound demodulator.

Better video LPF

I am always in search of perfection when it comes to video signals, one step closer to this is to use an ML6420 IC. The ML6420 is an active video filter designed for broadcast digital video applications, it has a 5.5 MHz cut off frequency and is phased equalised so it doesn't bugger up transients. This IC can be fitted instead of the Cirkit unit, but will need to be AC coupled, DC coupling gets awkward as it runs on a single 5V supply. The IC is a surface mount unit and can be used with "Wainwright" prototyping board. One of these ICs is fitted to GB3ZZ, bet you never noticed!

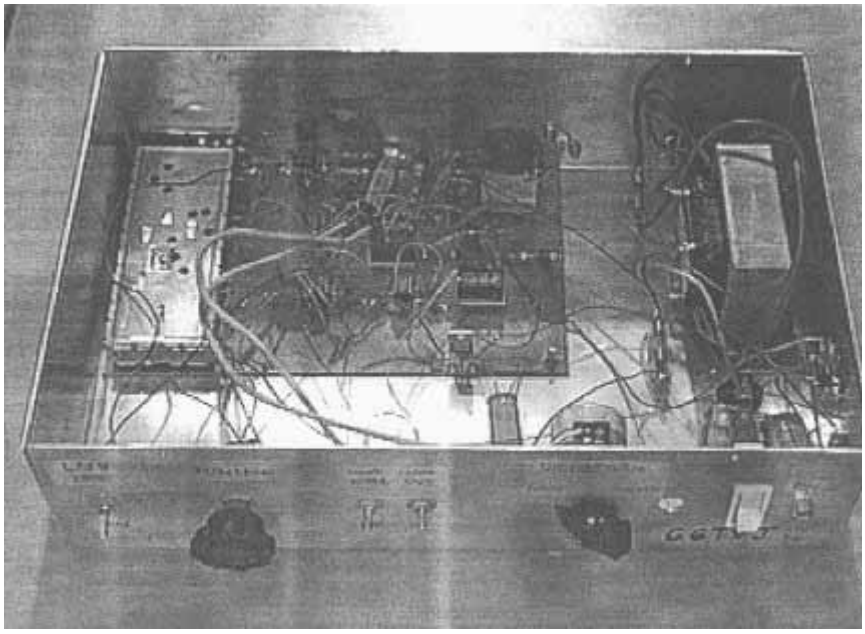

Biscuit Tin Engineering! Receiver circuitry mounted in a box.

Power Supply

I powered the receiver from the mains, split supplies are needed so battery operation is a bit tricky. By using DC-DC converters a negative rail can be derived for the op amps but care is needed for the tuning volts as a battery powered RX may drift. If an 18V LNB supply is needed (3cms) then a second DC-DC converter will be needed to generate 18V from 12V. Always decouple DC-DC converters and keep them away from the video circuitry.

Components

The tuner module was bought from "Satellite Surplus", this lot appear at various rallies though out the year. I don't think they have any modules left, but if you bought one of these tuners from them for future use, now is your chance to make use of it.

The 4.5 MHz filter is available from Cirkit electronics but beware their stock control of these specialist items is not always very good. If you fancy a ML6420-1CS they are made by Micro Linear and available from Ambar Components on 0l844 261 144, ask for a data sheet which tells you how to wire it up.

Fig 1

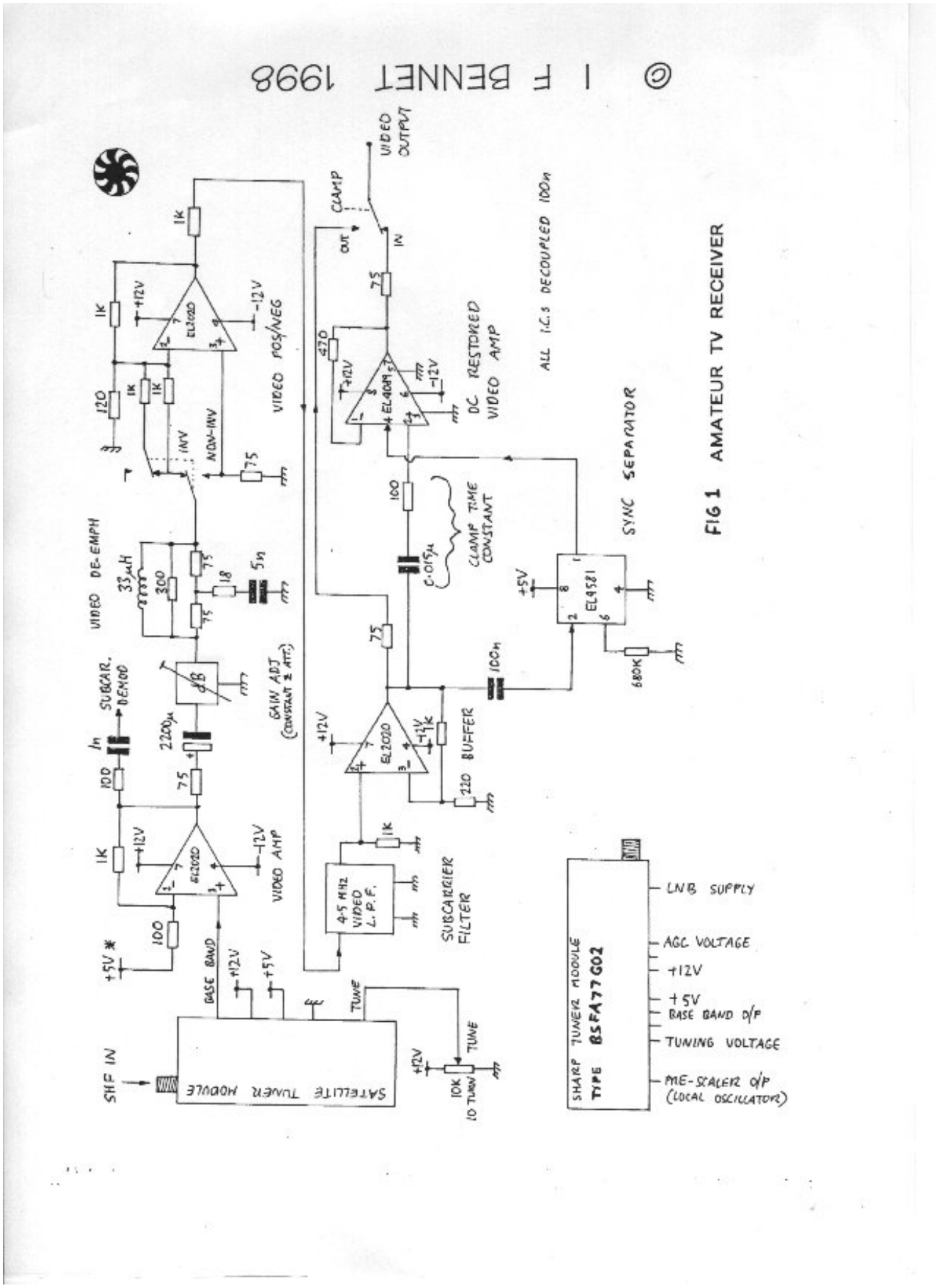
© I F BENNET 1998
FIG 1 AMATEUR TV RECEIVER
ALL I.C.s DECOUPLED 100n
SATELLITE TUNER MODULE
SHF IN
BASE BAND
TUNE
10K 10 TURN
SHARP TUNER MODULE
TYPE BSFA77G02
LNB SUPPLY
AGC VOLTAGE
+12V
+5V
BASE BAND O/P
TUNING VOLTAGE
ME-SCALER O/P (LOCAL OSCILLATOR)
SUBCARRIER FILTER
4.5 MHz VIDEO L.P.F.
VIDEO AMP
BUFFER
GAIN ADJ (CONSTANT Z ATT.)
SUBCAR. DEMOD
VIDEO DE-EMPH
VIDEO POS/NEG
NON-INV
INV
DC RESTORED VIDEO AMP
CLAMP TIME CONSTANT
SYNC SEPARATOR
CLAMP
OUT
IN
VIDEO OUTPUT